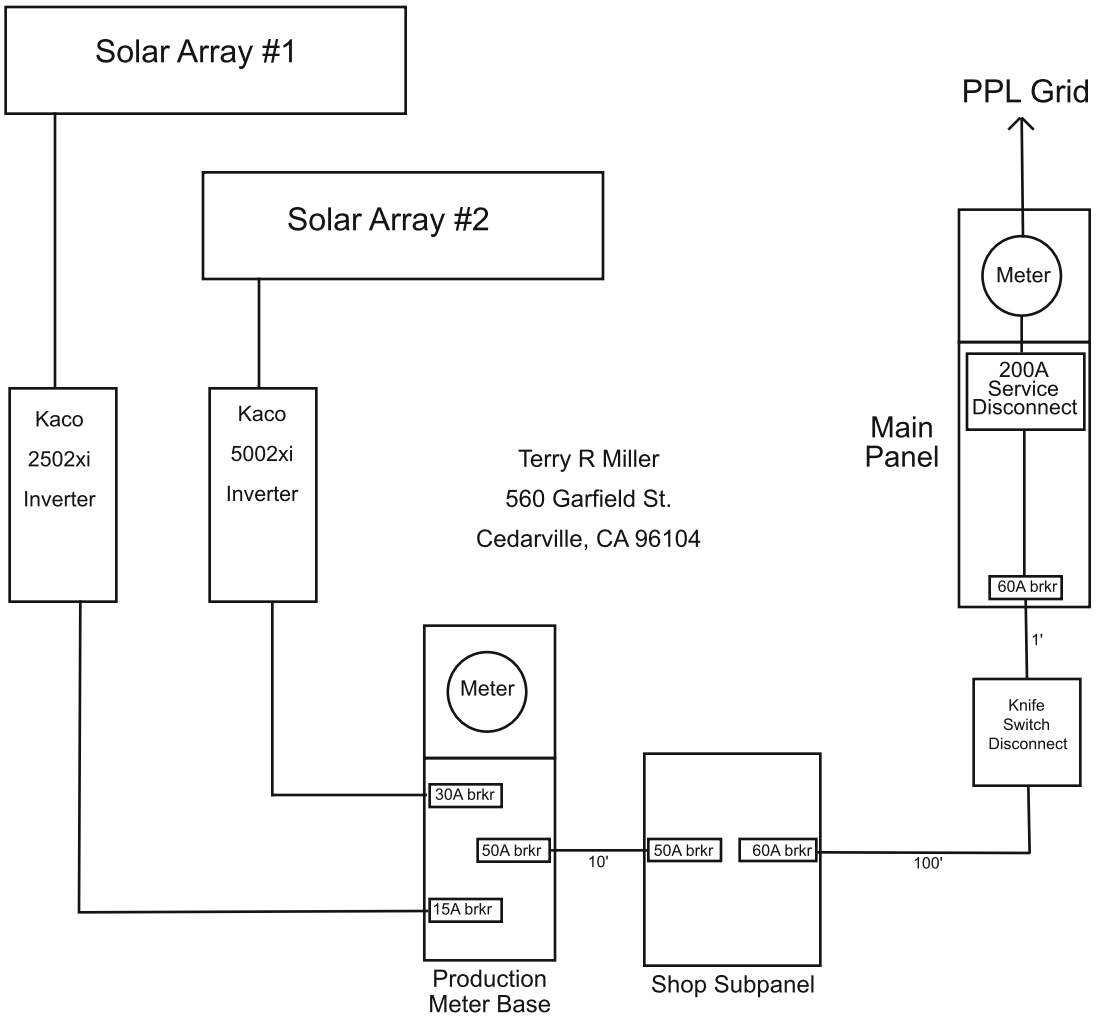
Solar Array #1
Solar Array #2
PPL Grid
Meter
200A Service Disconnect
Main Panel
60A brkr
1'
Knife Switch Disconnect
100'
Kaco 2502xi Inverter
Kaco 5002xi Inverter
Terry R Miller
560 Garfield St.
Cedarville, CA 96104
Meter
30A brkr
50A brkr
10'
15A brkr
Production Meter Base
50A brkr
60A brkr
Shop Subpanel